AERO

Using Your Setup Instructions

The Aero TableTop Setup Instructions are created specifically for your configuration. They include an exploded view of the frame which is sequentially numbered. We encourage you to study the instructions **before** attempting to assemble your exhibit.

Push-button connectors and pre-connected horizontal sections make assembly very simple. No tools are required.

Cleaning and Packing Your Display

1) Use care when cleaning aluminum extrusion or acrylic inserts. Use only non-abrasive cleaners.
2) Retain all packing material. It will make re-packing much easier and will reduce the likelihood of shipping damage.

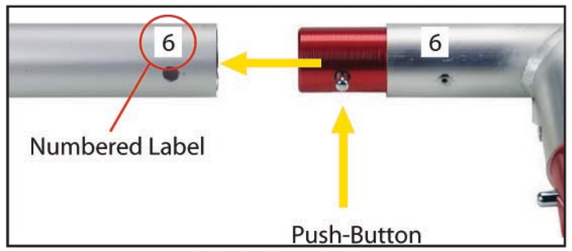

Connections are made by holding the button down and sliding the red tube into the opposing tube until it locks in place.
To disassemble, push button and pull or twist extrusions apart.

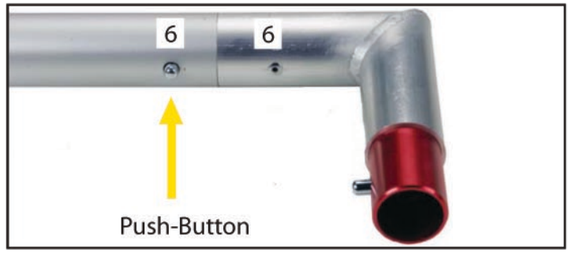

Table Top Base Plate Connections

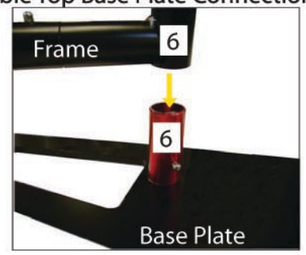

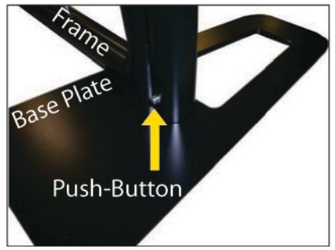

Base Plate Connections are made by holding the button down and sliding the red tube into the opposing tube on base until it locks in place.

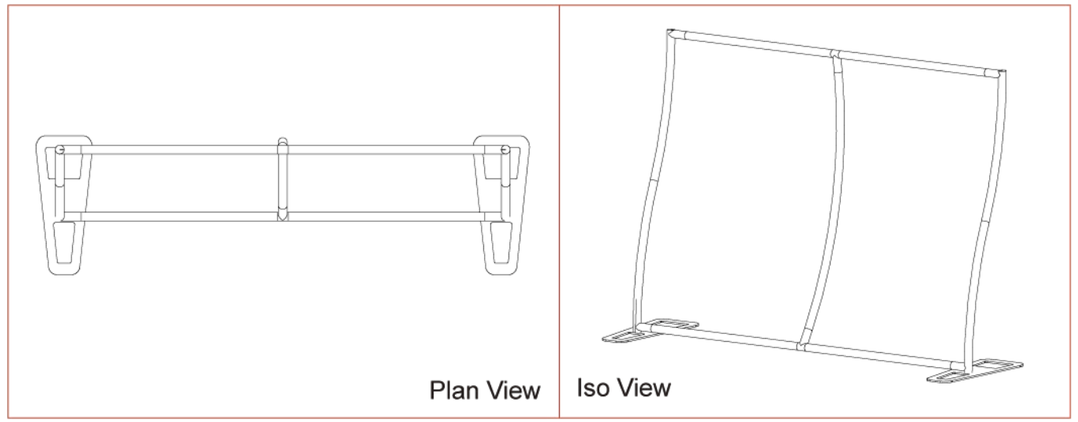

Steps:
1) Attach Base Plates 1 and 2 to verticals 1 and 2 as shown.
2) Assemble pieces 3 thru 14 together as shown.

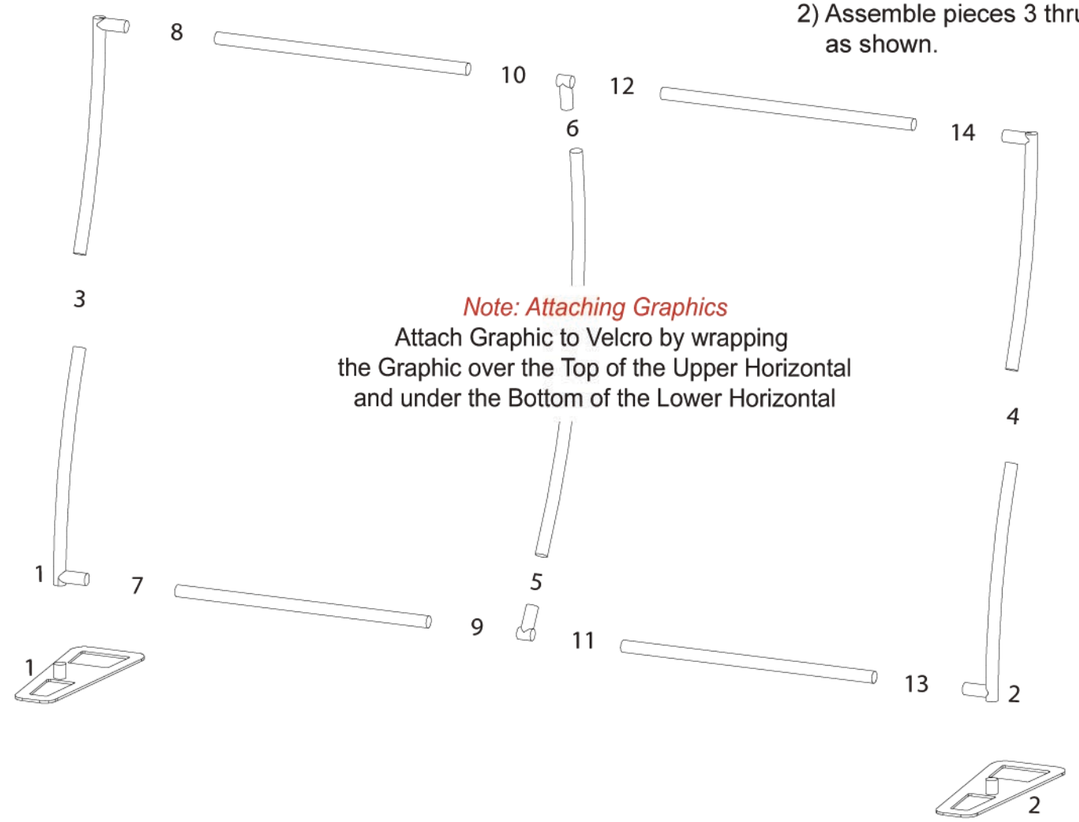

Note: Attaching Graphics
Attach Graphic to Velcro by wrapping the Graphic over the Top of the Upper Horizontal and under the Bottom of the Lower Horizontal