Aviator Pinwheel

12'w × 48"h **OUTSIDE** (×3)

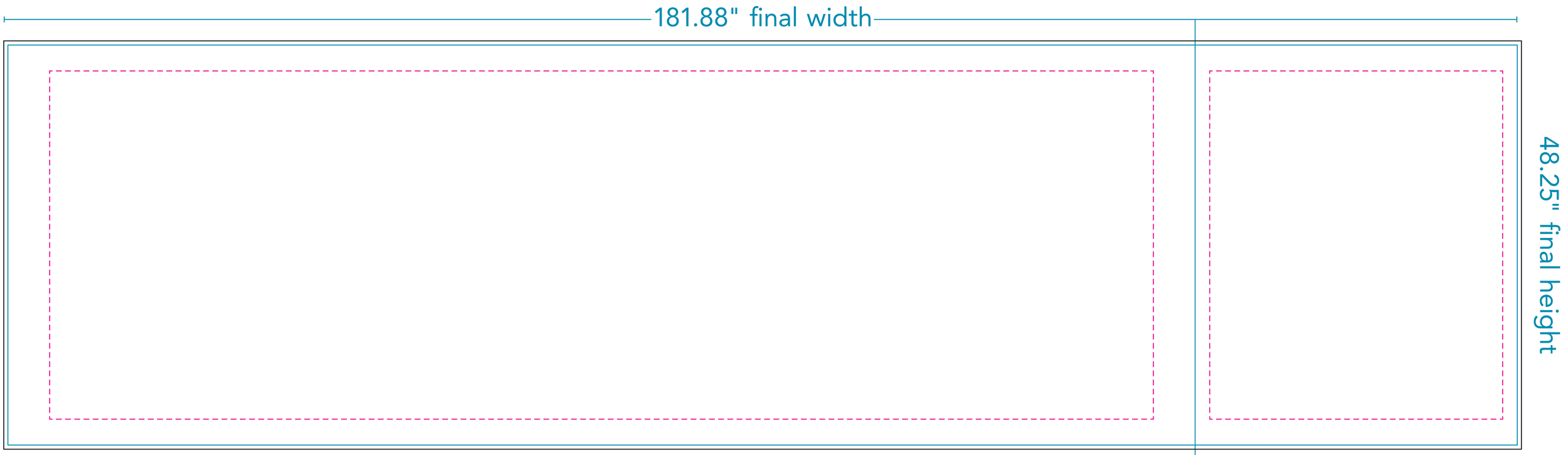

Print Size: 182.88"w × 49.25"h
Final Size: 181.88"w × 48.25"h
Live Area: 133"w × 42"h (outside)
35.3"w × 42"h (foldback)

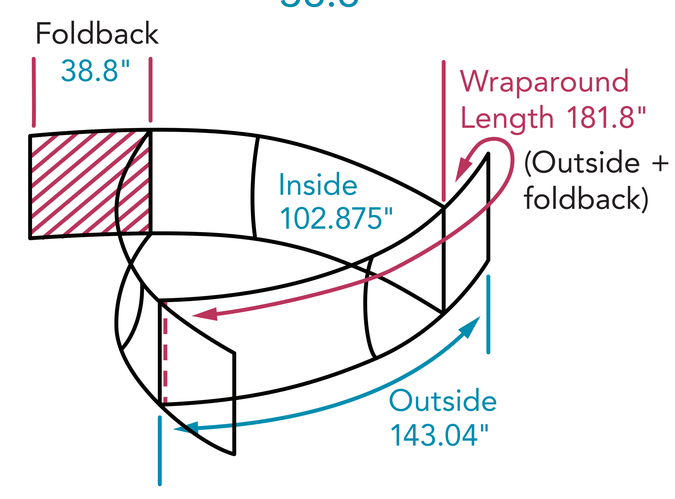

File Preparation Tips

- Design artwork to print size listed
- Submit layered files in their native program
  (Photoshop, Illustrator and InDesign are compatible programs)
- Supply all image links to ensure quality
- Keep resolution of images at a minimum 100 ppi
  (View document at print size to preview image quality)
- Include fonts for any live text OR convert text to outlines
- Maintain a consistent colorspace in artwork and links
- Keep Pantone colormatches indicated as spot colors

Aviator Pinwheel

12'w × 48"h **INSIDE** (×3)

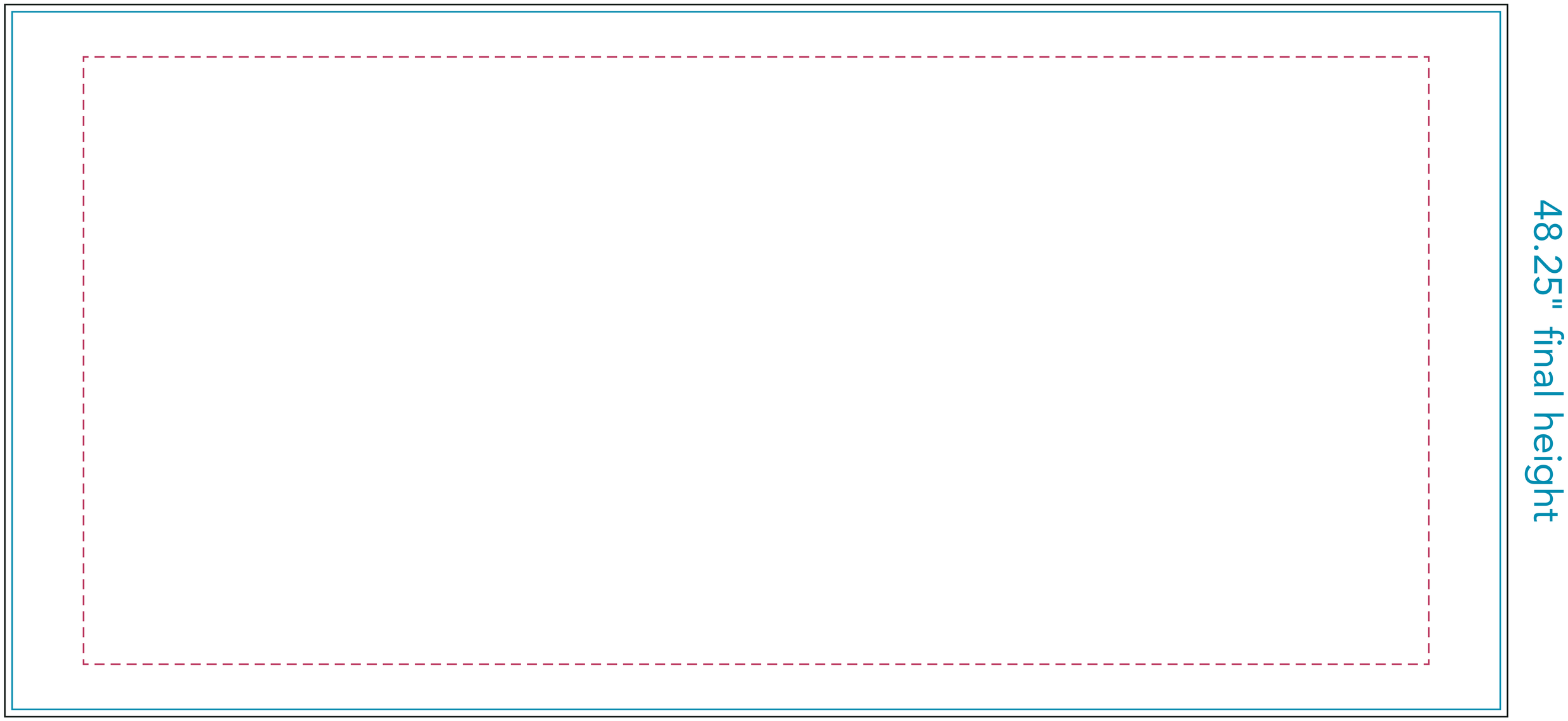

Print Size: 103.875"w × 49.25"h
Final Size: 102.875"w × 48.25"h
Live Area: 93"w × 42"h

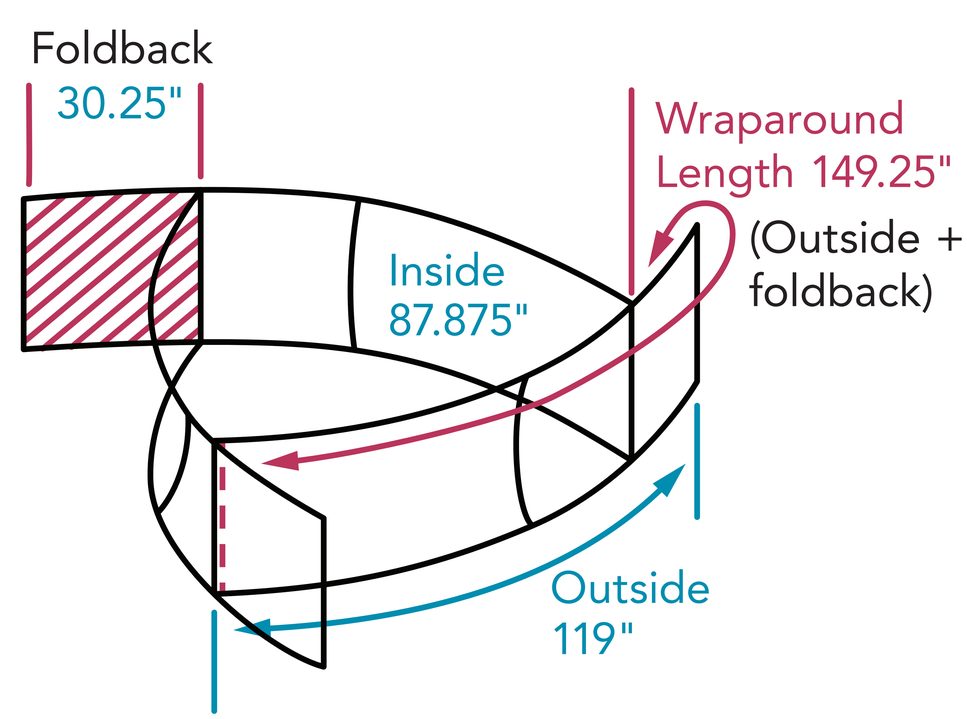

File Preparation Tips

- Design artwork to print size listed
- Submit layered files in their native program
  (Photoshop, Illustrator and InDesign are compatible programs)
- Supply all image links to ensure quality
- Keep resolution of images at a minimum 100 ppi
  (View document at print size to preview image quality)
- Include fonts for any live text OR convert text to outlines
- Maintain a consistent colorspace in artwork and links
- Keep Pantone colormatches indicated as spot colors