30' Modulate Kit 03:
Frame 11 w/ Rounded Right Corner

TEMPLATE @ 1/2 SIZE
Total graphic area: 47.5"w X 96.25"h
Total finished area: 43.5"w X 92.25"h

Please be sure to include the 2" bleed around the perimeter (note trim & stitch locations on template). DO NOT design any critical elements (text, logos, etc.) within 2" of the edge.

General Art Guidelines:

– CMYK Color Mode

– All Solid Coated Pantone colors should be called out in the art as spot colors

– Embed all images and support files

– Resolution must be 200-240 ppi @ 1/2 size, 100-120 at full size

– All fonts must be created to outlines

– Do not scale artboard

– Background color/images must bleed to the edge of artboard

– Do not use spot colors from template in your artwork as they will not print

30' Modulate Kit 03:
Frame 10

TEMPLATE @ 1/2 SIZE
Total graphic area: 36.5"w X 100.25"h
Total finished area: 32.5"w X 96.25"h

Please be sure to include the 2" bleed around the perimeter (note trim & stitch locations on template). DO NOT design any critical elements (text, logos, etc.) within 2" of the edge.

General Art Guidelines:

– CMYK Color Mode

– All Solid Coated Pantone colors should be called out in the art as spot colors

– Embed all images and support files

– Resolution must be 200-240 ppi @ 1/2 size, 100-120 at full size

– All fonts must be created to outlines

– Do not scale artboard

– Background color/images must bleed to the edge of artboard

– Do not use spot colors from template in your artwork as they will not print

30' Modulate Kit 03:
Frame 09

TEMPLATE @ 1/2 SIZE
Total graphic area: 70.25"w X 100.25"h
Total finished area: 66.25"w X 96.25"h

Please be sure to include the 2" bleed around the perimeter (note trim & stitch locations on template). DO NOT design any critical elements (text, logos, etc.) within 2" of the edge.

General Art Guidelines:

– CMYK Color Mode

– All Solid Coated Pantone colors should be called out in the art as spot colors

– Embed all images and support files

– Resolution must be 200-240 ppi @ 1/2 size, 100-120 at full size

– All fonts must be created to outlines

– Do not scale artboard

– Background color/images must bleed to the edge of artboard

– Do not use spot colors from template in your artwork as they will not print

30' Modulate Kit 03:
Frame 07

TEMPLATE @ 1/2 SIZE
Total graphic area: 94.25"w X 96.25"h
Total finished area: 90.25"w X 92.25"h

Please be sure to include the 2" bleed around the perimeter (note trim & stitch locations on template). DO NOT design any critical elements (text, logos, etc.) within 2" of the edge.

General Art Guidelines:

– CMYK Color Mode

– All Solid Coated Pantone colors should be called out in the art as spot colors

– Embed all images and support files

– Resolution must be 200-240 ppi @ 1/2 size, 100-120 at full size

– All fonts must be created to outlines

– Do not scale artboard

– Background color/images must bleed to the edge of artboard

– Do not use spot colors from template in your artwork as they will not print

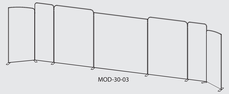

30' Modulate Kit 03:
Frame 09

TEMPLATE @ 1/2 SIZE
Total graphic area: 70.25"w X 100.25"h
Total finished area: 66.25"w X 96.25"h

Please be sure to include the 2" bleed around the perimeter (note trim & stitch locations on template). DO NOT design any critical elements (text, logos, etc.) within 2" of the edge.

General Art Guidelines:

– CMYK Color Mode

– All Solid Coated Pantone colors should be called out in the art as spot colors

– Embed all images and support files

– Resolution must be 200-240 ppi @ 1/2 size, 100-120 at full size

– All fonts must be created to outlines

– Do not scale artboard

– Background color/images must bleed to the edge of artboard

– Do not use spot colors from template in your artwork as they will not print

30' Modulate Kit 03:
Frame 10

TEMPLATE @ 1/2 SIZE
Total graphic area: 36.5"w X 100.25"h
Total finished area: 32.5"w X 96.25"h

Please be sure to include the 2" bleed around the perimeter (note trim & stitch locations on template). DO NOT design any critical elements (text, logos, etc.) within 2" of the edge.

General Art Guidelines:

– CMYK Color Mode

– All Solid Coated Pantone colors should be called out in the art as spot colors

– Embed all images and support files

– Resolution must be 200-240 ppi @ 1/2 size, 100-120 at full size

– All fonts must be created to outlines

– Do not scale artboard

– Background color/images must bleed to the edge of artboard

– Do not use spot colors from template in your artwork as they will not print

30' Modulate Kit 03:
Frame 11 w/ Rounded Left Corner

TEMPLATE @ 1/2 SIZE
Total graphic area: 47.5"w X 96.25"h
Total finished area: 43.5"w X 92.25"h

Please be sure to include the 2" bleed around the perimeter (note trim & stitch locations on template). DO NOT design any critical elements (text, logos, etc.) within 2" of the edge.

General Art Guidelines:

– CMYK Color Mode

– All Solid Coated Pantone colors should be called out in the art as spot colors

– Embed all images and support files

– Resolution must be 200-240 ppi @ 1/2 size, 100-120 at full size

– All fonts must be created to outlines

– Do not scale artboard

– Background color/images must bleed to the edge of artboard

– Do not use spot colors from template in your artwork as they will not print

30’ Modulate Kit 03:
Frame 11 w/ Rounded Right Corner

TEMPLATE @ 1/2 SIZE
Total graphic area: 47.5”w X 96.25”h
Total finished area: 43.5”w X 92.25”h

Please be sure to include the 2” bleed around the perimeter (note trim & stitch locations on template). DO NOT design any critical elements (text, logos, etc.) within 2” of the edge.

General Art Guidelines:

– CMYK Color Mode

– All Solid Coated Pantone colors should be called out in the art as spot colors

– Embed all images and support files

– Resolution must be 200-240 ppi @ 1/2 size, 100-120 at full size

– All fonts must be created to outlines

– Do not scale artboard

– Background color/images must bleed to the edge of artboard

– Do not use spot colors from template in your artwork as they will not print

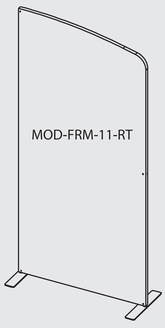

30’ Modulate Kit 03:
Frame 10

TEMPLATE @ 1/2 SIZE
Total graphic area: 36.5”w X 100.25”h
Total finished area: 32.5”w X 96.25”h

Please be sure to include the 2” bleed around the perimeter (note trim & stitch locations on template). DO NOT design any critical elements (text, logos, etc.) within 2” of the edge.

General Art Guidelines:

– CMYK Color Mode

– All Solid Coated Pantone colors should be called out in the art as spot colors

– Embed all images and support files

– Resolution must be 200-240 ppi @ 1/2 size, 100-120 at full size

– All fonts must be created to outlines

– Do not scale artboard

– Background color/images must bleed to the edge of artboard

– Do not use spot colors from template in your artwork as they will not print

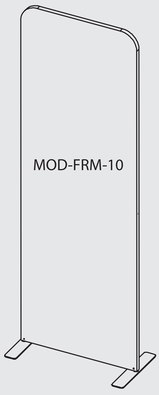

30’ Modulate Kit 03:
Frame 09

TEMPLATE @ 1/2 SIZE
Total graphic area: 70.25”w X 100.25”h
Total finished area: 66.25”w X 96.25”h

Please be sure to include the 2” bleed around the perimeter (note trim & stitch locations on template). DO NOT design any critical elements (text, logos, etc.) within 2” of the edge.

General Art Guidelines:

- CMYK Color Mode
- All Solid Coated Pantone colors should be called out in the art as spot colors
- Embed all images and support files
- Resolution must be 200-240 ppi @ 1/2 size, 100-120 at full size
- All fonts must be created to outlines
- Do not scale artboard
- Background color/images must bleed to the edge of artboard
- Do not use spot colors from template in your artwork as they will not print

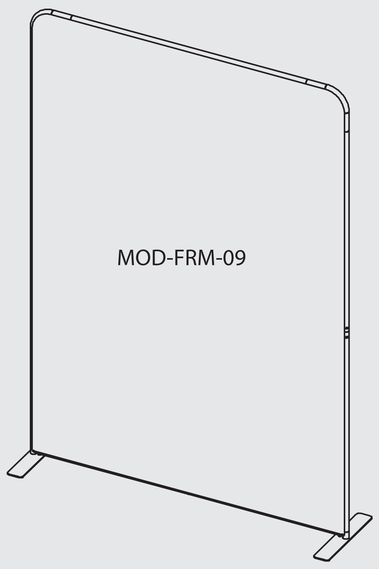

30’ Modulate Kit 03:
Frame 07

TEMPLATE @ 1/2 SIZE
Total graphic area: 94.25”w X 96.25”h
Total finished area: 90.25”w X 92.25”h

Please be sure to include the 2” bleed around the perimeter (note trim & stitch locations on template). DO NOT design any critical elements (text, logos, etc.) within 2” of the edge.

General Art Guidelines:

– CMYK Color Mode

– All Solid Coated Pantone colors should be called out in the art as spot colors

– Embed all images and support files

– Resolution must be 200-240 ppi @ 1/2 size, 100-120 at full size

– All fonts must be created to outlines

– Do not scale artboard

– Background color/images must bleed to the edge of artboard

– Do not use spot colors from template in your artwork as they will not print

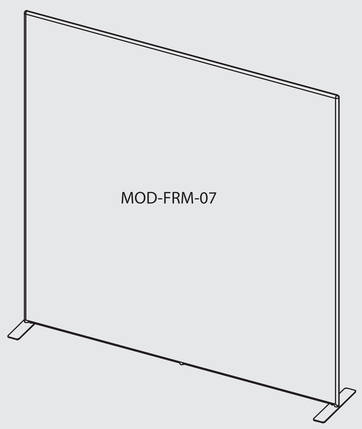

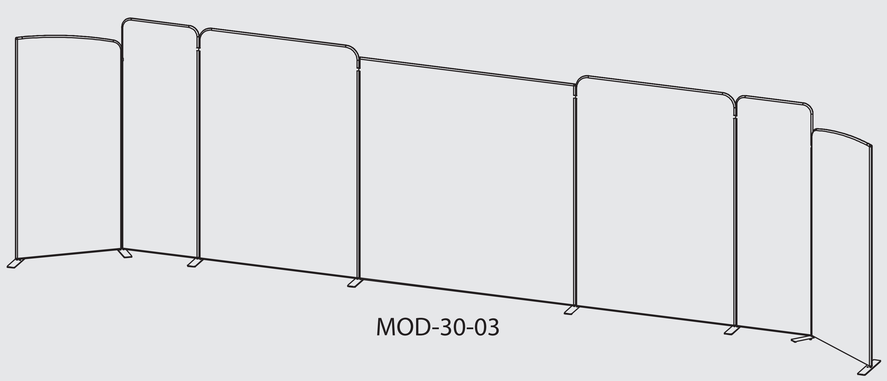

30’ Modulate Kit 03:
Frame 09

TEMPLATE @ 1/2 SIZE
Total graphic area: 70.25”w X 100.25”h
Total finished area: 66.25”w X 96.25”h

Please be sure to include the 2” bleed around the perimeter (note trim & stitch locations on template). DO NOT design any critical elements (text, logos, etc.) within 2” of the edge.

General Art Guidelines:

– CMYK Color Mode

– All Solid Coated Pantone colors should be called out in the art as spot colors

– Embed all images and support files

– Resolution must be 200-240 ppi @ 1/2 size, 100-120 at full size

– All fonts must be created to outlines

– Do not scale artboard

– Background color/images must bleed to the edge of artboard

– Do not use spot colors from template in your artwork as they will not print

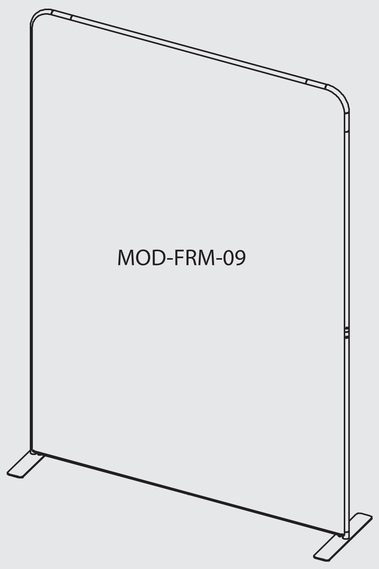

30’ Modulate Kit 03:
Frame 10

TEMPLATE @ 1/2 SIZE
Total graphic area: 36.5”w X 100.25”h
Total finished area: 32.5”w X 96.25”h

Please be sure to include the 2” bleed around the perimeter (note trim & stitch locations on template). DO NOT design any critical elements (text, logos, etc.) within 2” of the edge.

General Art Guidelines:

– CMYK Color Mode

– All Solid Coated Pantone colors should be called out in the art as spot colors

– Embed all images and support files

– Resolution must be 200-240 ppi @ 1/2 size, 100-120 at full size

– All fonts must be created to outlines

– Do not scale artboard

– Background color/images must bleed to the edge of artboard

– Do not use spot colors from template in your artwork as they will not print

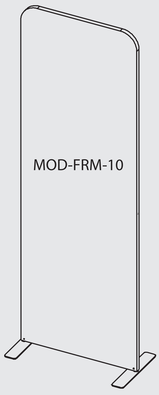

30’ Modulate Kit 03:
Frame 11 w/ Rounded Left Corner

TEMPLATE @ 1/2 SIZE
Total graphic area: 47.5”w X 96.25”h
Total finished area: 43.5”w X 92.25”h

Please be sure to include the 2” bleed around the perimeter (note trim & stitch locations on template). DO NOT design any critical elements (text, logos, etc.) within 2” of the edge.

General Art Guidelines:

– CMYK Color Mode

– All Solid Coated Pantone colors should be called out in the art as spot colors

– Embed all images and support files

– Resolution must be 200-240 ppi @ 1/2 size, 100-120 at full size

– All fonts must be created to outlines

– Do not scale artboard

– Background color/images must bleed to the edge of artboard
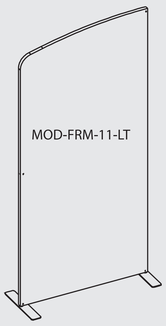
– Do not use spot colors from template in your artwork as they will not print